Product introduction:

The SBS lithium energy storage battery use long working life LiFePO4 battery, and high performance BMS to protect and manage the battery system, it has wider usage and longer life than traditional battery.

Product features:

※ High power, friendly interface, free combination
※ High quality battery cell, precise combination
※ CAN/RS485/WIFI/4G/Blue tooth communication
※ BMS customization supported
※ Thick shell, well protection for inside cells

BMS Protection:

Over Current | Over Voltage | High Temperature | Low Voltage | Short Circuit

Application area:

※Energy storage system, control system, alarm system, power system, database
※Emergency lighting system, emergency power supply, UPS
※ Telecommunication, communication, fire fighting system

MODEL	RGBS-51.2V 100AH	RGBS-51.2V 200AH	RGBS-51.2V 300AH
Standard Voltage	51.2V	51.2V	51.2V
Standard Capacity	100Ah	200Ah	300Ah
Standard Energy	5.12kWh	10.24kWh	15.36kWh
Working Voltage	43.2-57.6V		
Standard Charge Current	50A	100A	100A
Standard Discharge Current	100A	100A	200A
Suggested DOD	80%		
Cycle Life	>6000 cycles		
IP Rating	Ip21		
Operating temperature for discharge	-20°C~60°C		
Operating temperature for charge	0°C~45°C		
Max Parallel	15pcs		
Communication	RS232/CAN/RS485(WIFI/BT optional)		
Display	LCD Display (touch screen optional)		
Warranty	5 years		
Certificate	UN38.3/MSDS/CE/ROHS/FCC		
N.W./unit(kg)	44	84	110
G.W./unit(kg)	52	99	129
Product Size/unit(mm)	430*482*178	790*482*178	790*482*240
Meas/unit(mm)	530*480*300	870*610*410	870*610*440
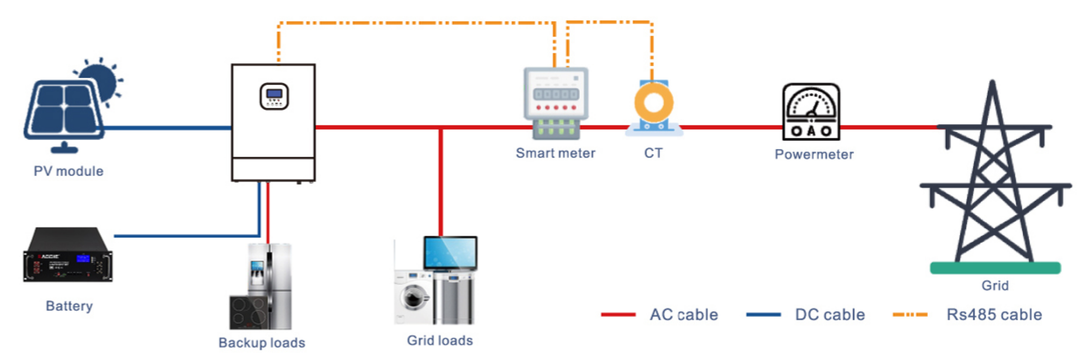
over 96% self-consumption rate